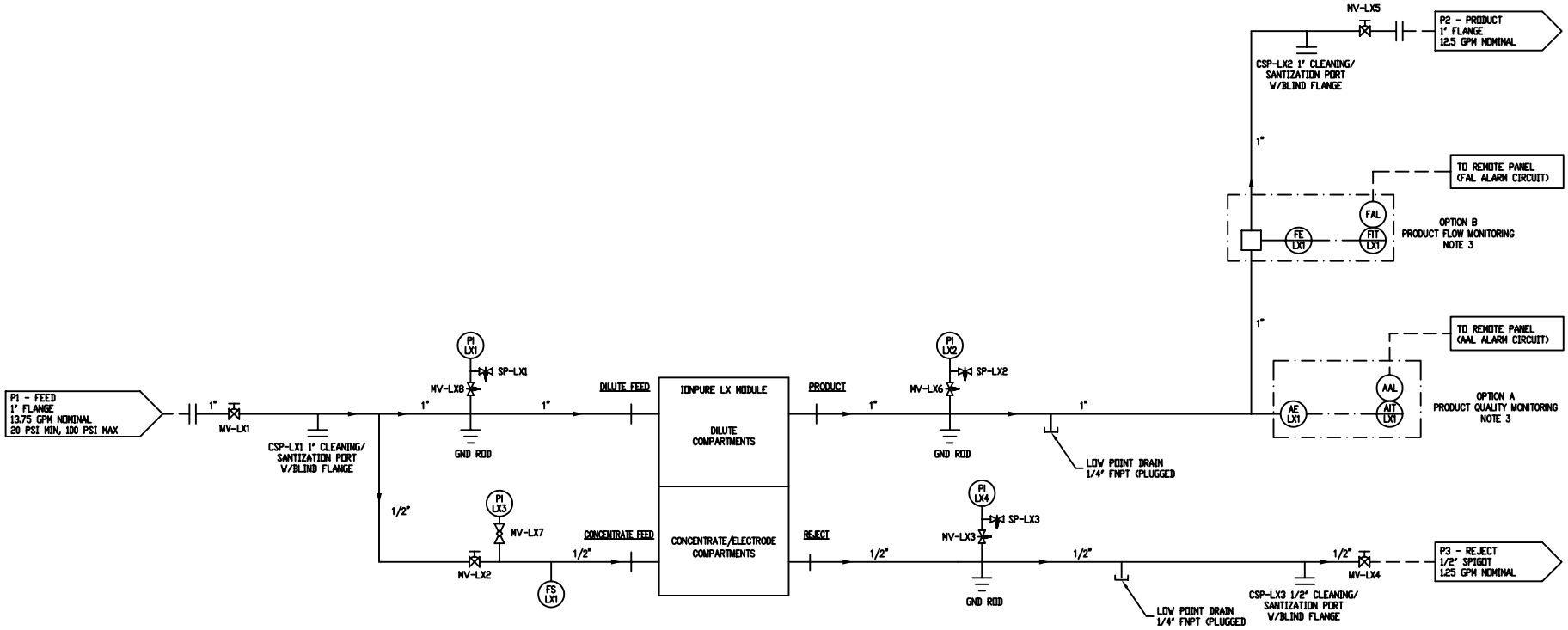

NOTES:

1. LEADS FROM GROUNDING RODS/CAPS ARE TO BE RUN TO THREADED HOLES ON SKID.
2. ALL PROCESS PLUMBING, UNLESS OTHERWISE NOTED, TO BE CPVC SCHEDULE 80 PIPE.
3. SEE OPTIONS TABLE, LOCATED ON GENERAL ARRANGEMENT DRAWING.
4. — — — — DENOTES LINES BY CUSTOMER/OTHERS.

STD: Border-0102-24X36D1-AC-BPID

INT REF: INT_REF

BAR = 1" AT PLOT SCALE

REV	DESCRIPTION	DATE	DWN	CHKD	APVD	ECN

COMPANY CONFIDENTIAL
THIS DOCUMENT AND ALL INFORMATION CONTAINED HEREIN ARE THE PROPERTY OF THE COMPANY AND ARE TO INVIOLATE. THE DESIGN CONCEPTS AND INFORMATION CONTAINED HEREIN ARE DEEMED TO BE CONFIDENTIAL AND SUBJECT TO COPYRIGHT. THEY ARE NOT TRANSFERABLE AND MAY BE USED ONLY FOR THE PURPOSE FOR WHICH THE DOCUMENT IS EXPRESSLY LOANED. THEY MUST NOT BE DISCLOSED, REPRODUCED, LOANED OR USED IN ANY OTHER MANNER WITHOUT THE EXPRESS WRITTEN CONSENT OF OWNER. IN NO EVENT SHALL, IF LOSS, IF ANY, BE SUFFERED BY ANYONE OTHER THAN OWNER, OWNER'S AGENTS AND ASSIGNS. UPON THE FULFILLMENT OF THE PURPOSE FOR WHICH THE DOCUMENT IS LOANED, THE RECEIVING PARTY SHALL RETURN ALL COPIES AND EXTRACTS, AND ALL RELATED NOTES AND ANALYSIS, SHALL BE RETURNED TO OWNER, OR DESTROYED AS FURNISHED BY OWNER. ACCEPTANCE OF DELIVERY OF THIS DOCUMENT CONSTITUTES AGREEMENT TO THESE TERMS AND CONDITIONS.

DESIGNER	DATE	
CHECKER	DATE	
ENGINEER	DATE	
MANAGER	DATE	
FILE:		
SCALE: NONE		

TITLE: SINGLE MODULE IP-LX SYSTEM SUGGESTED P&ID (REQUIRED AND OPTIONAL CONTROLS)

CLIENT

ION PURE — 10 Technology Drive – Lowell, MA

PROJECT	CODE	DRAWING	SHEET	REV
		S4802-000	1 OF 1	A